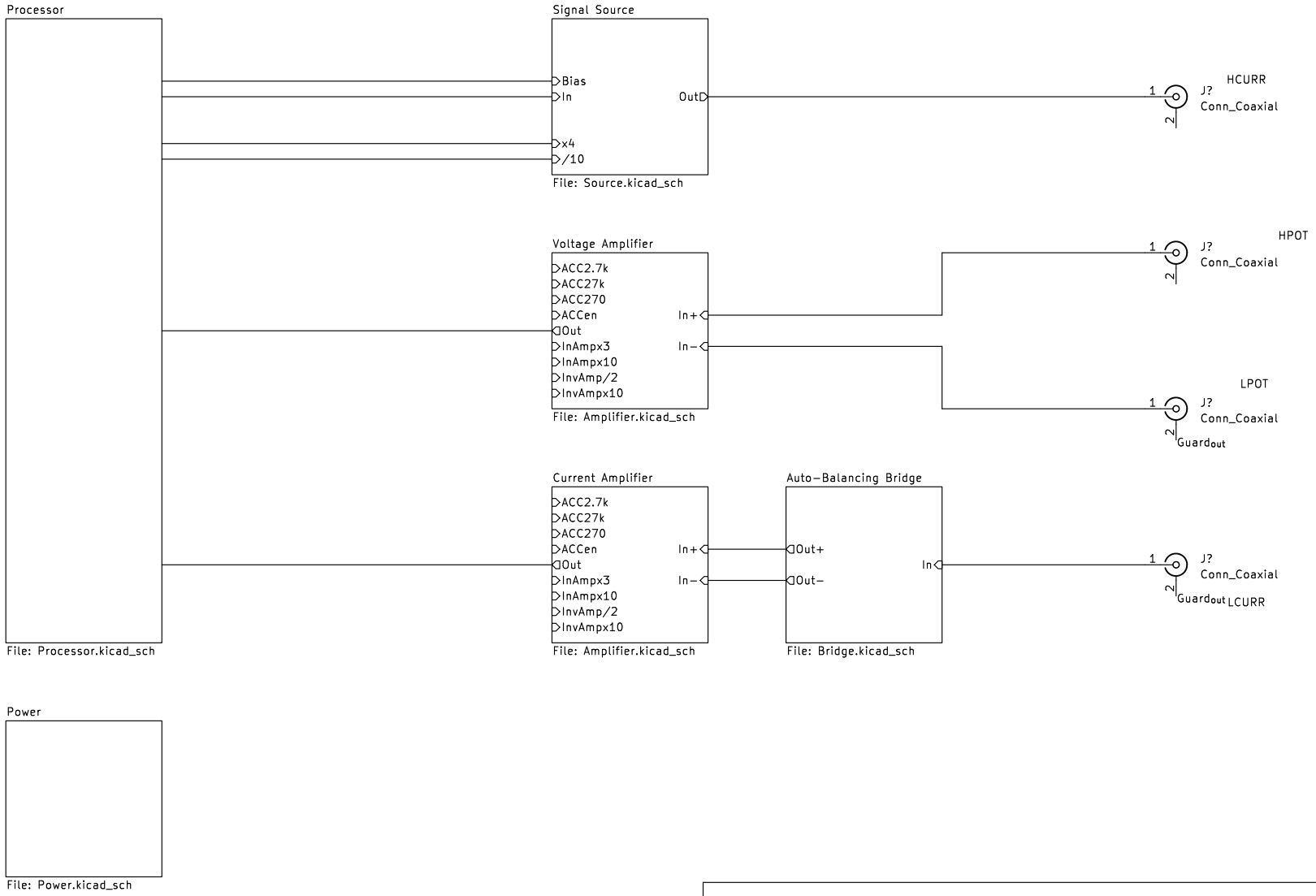


Work in Progress

**Harry and Yuki – EEE3 Instrumentation**

Sheet: /

File: Main Board.kicad_sch

***Title:***

| | | |
|---|---|---|
| Size: A4 | Date: 2026−01−15 | **Rev: Draft** |
| KiCad E.D.A. 9.0.7 | | Id: 1/8 |

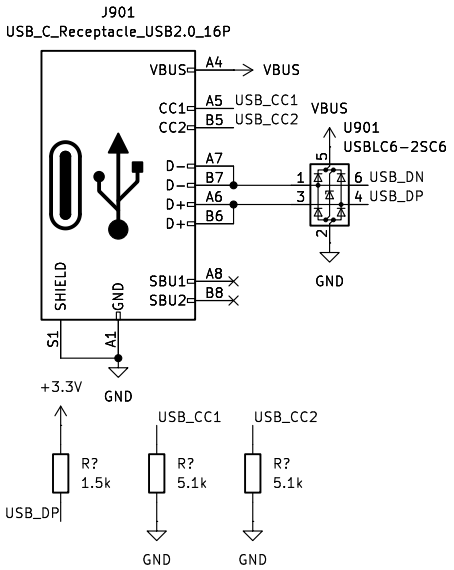


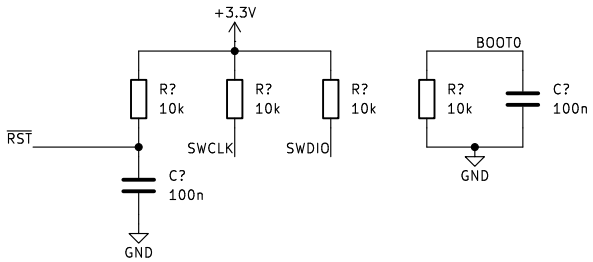


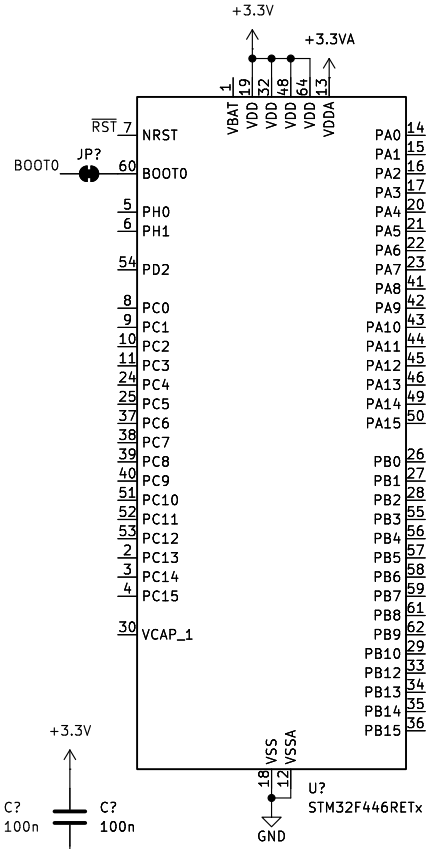


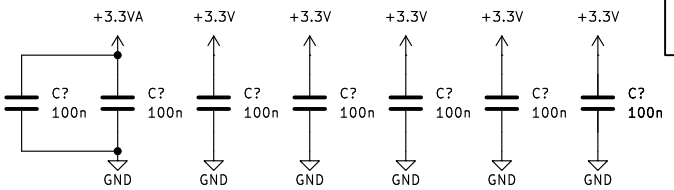


Work in Progress

**Harry and Yuki – EEE3 Instrumentation**

Sheet: /Processor/

File: Processor.kicad_sch

***Title:***

| | | |
|---|---|---|
| Size: A4 | Date: 2026-01-15 | **Rev: Draft** |
| KiCad E.D.A. 9.0.7 | | Id: 2/8 |

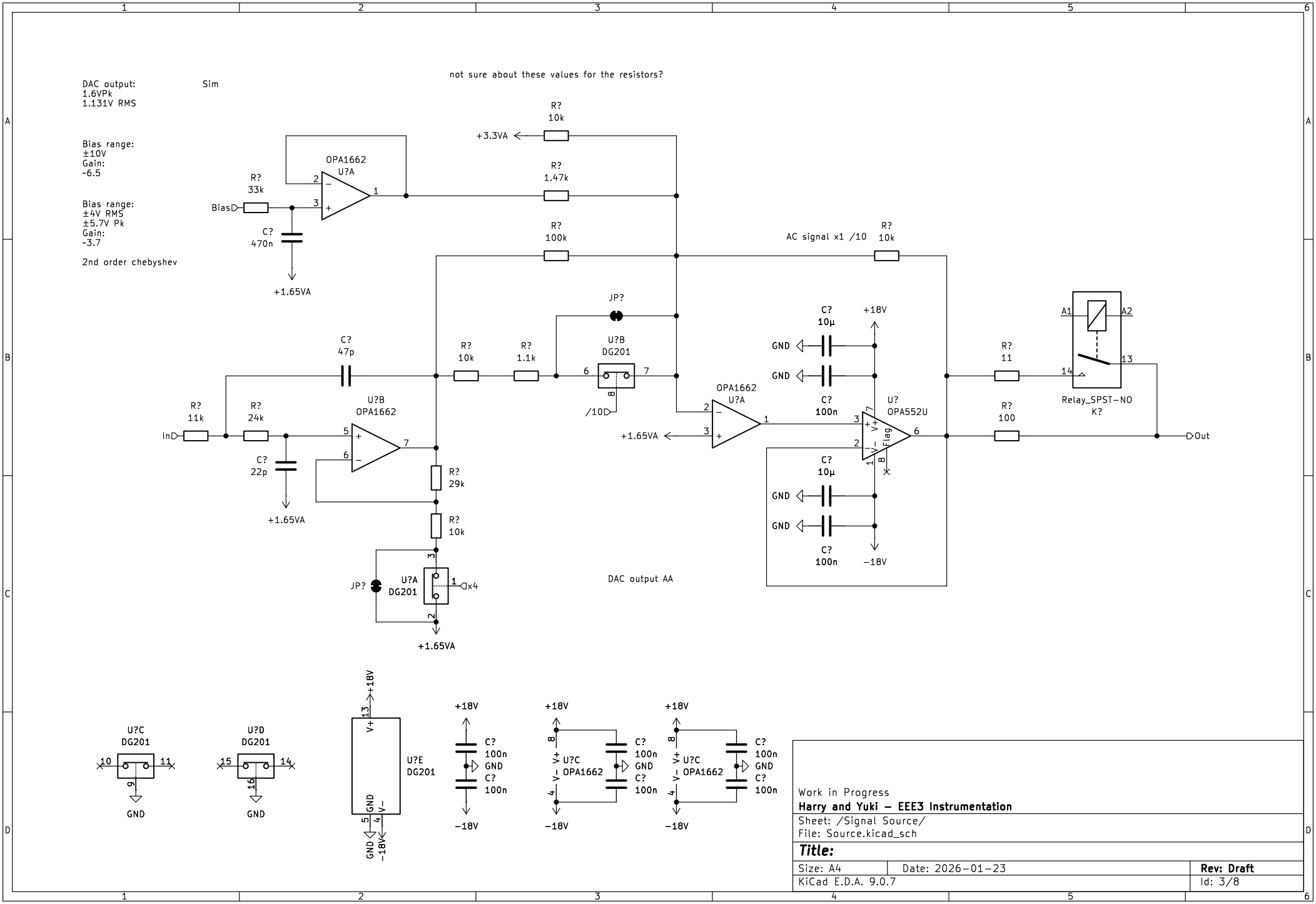


Work in Progress

**Harry and Yuki – EEE3 Instrumentation**

Sheet: /Signal Source/

File: Source.kicad_sch

***Title:***

| | | |
|---|---|---|
| Size: A4 | Date: 2026-01-23 | **Rev: Draft** |
| KiCad E.D.A. 9.0.7 | | Id: 3/8 |

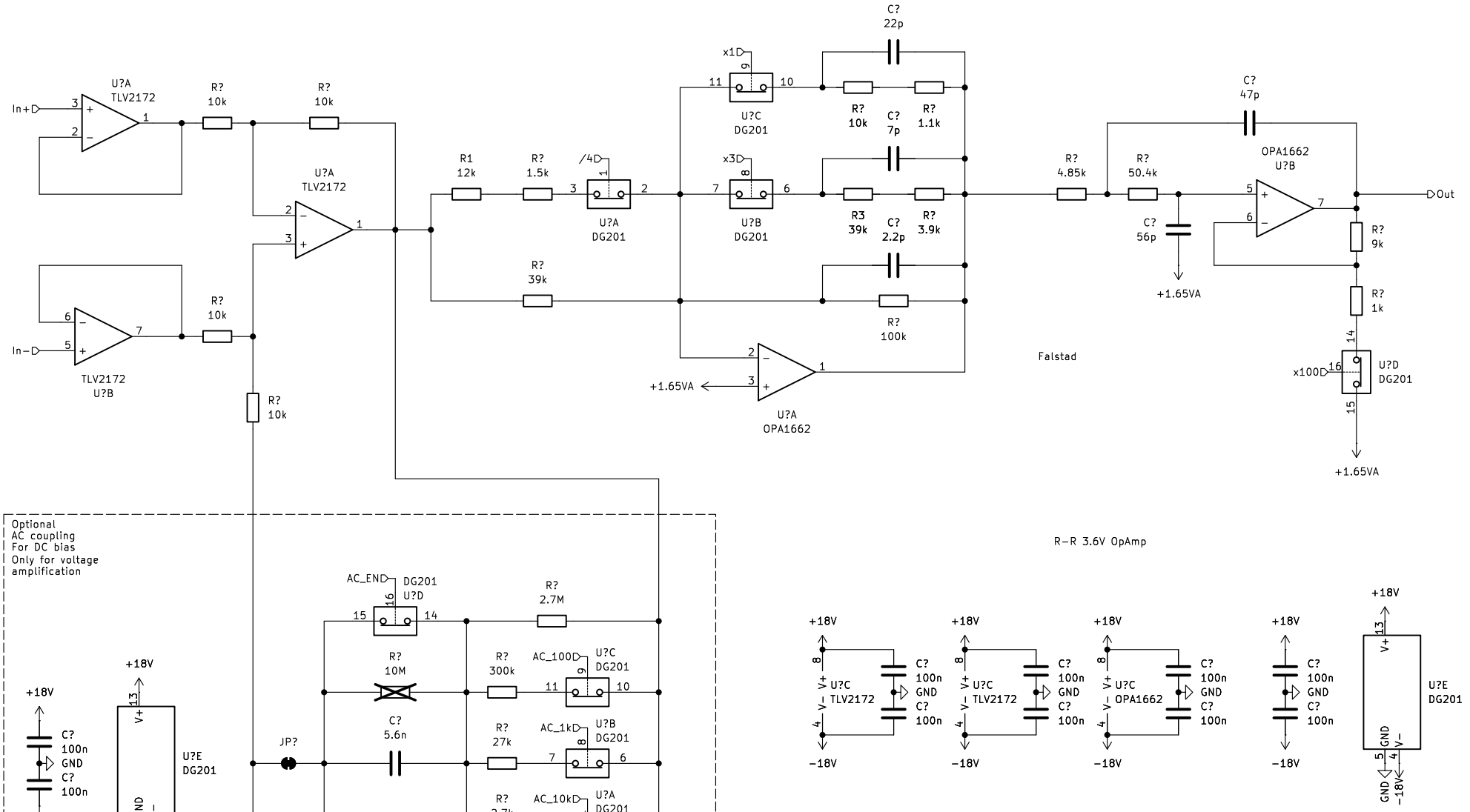


Work in Progress

**Harry and Yuki – EEE3 Instrumentation**

Sheet: /Voltage Amplifier/

File: Amplifier.kicad_sch

***Title: Instrumentation Amplifier***

| | | |
|---|---|---|
| Size: A4 | Date: 2026-01-15 | **Rev: Draft** |
| KiCad E.D.A. 9.0.7 | | Id: 4/8 |

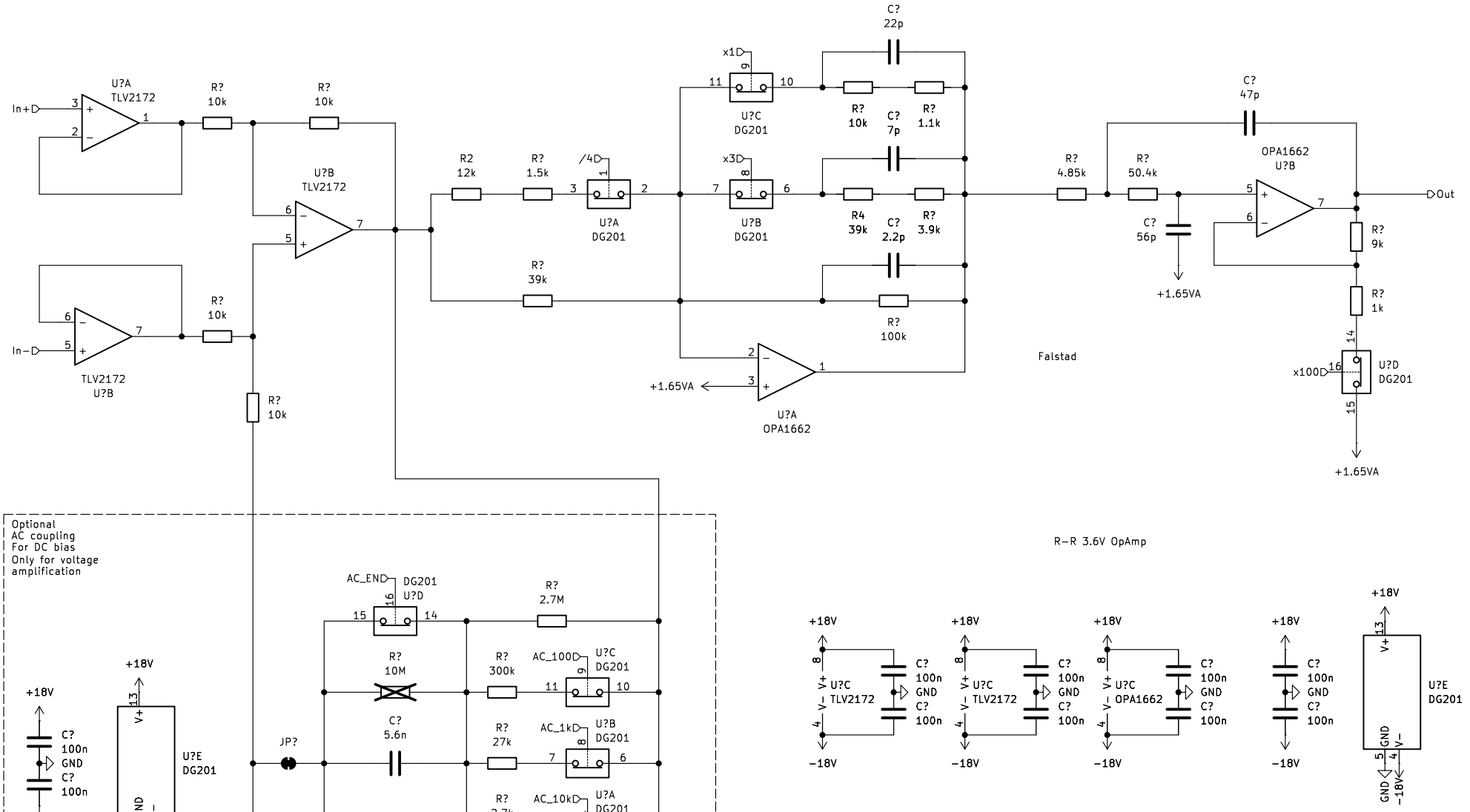


Work in Progress

**Harry and Yuki – EEE3 Instrumentation**

Sheet: /Current Amplifier/

File: Amplifier.kicad_sch

***Title: Instrumentation Amplifier***

| | | |
|---|---|---|
| Size: A4 | Date: 2026-01-15 | **Rev: Draft** |
| KiCad E.D.A. 9.0.7 | | Id: 6/8 |

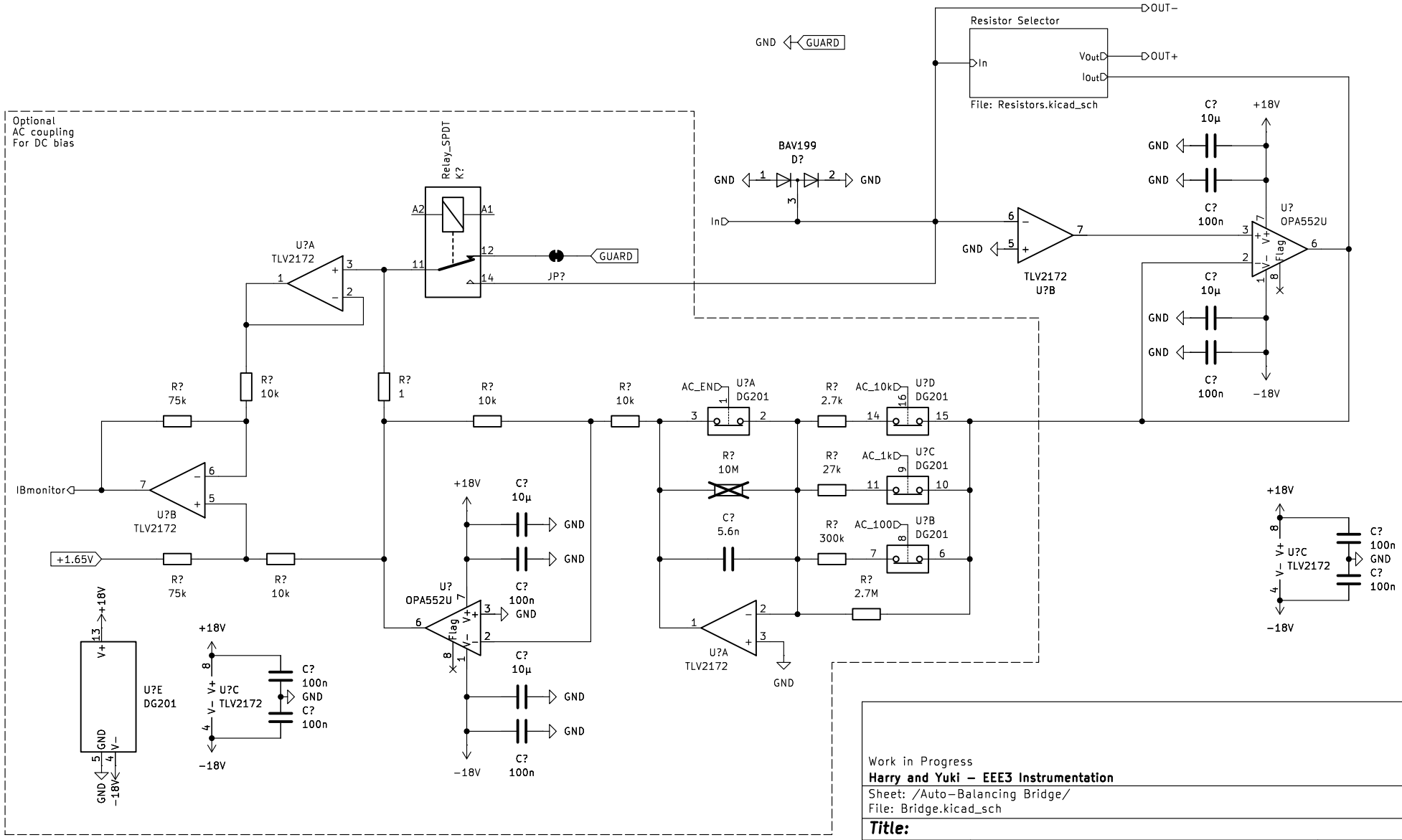


Work in Progress

**Harry and Yuki – EEE3 Instrumentation**

Sheet: /Auto-Balancing Bridge/

File: Bridge.kicad_sch

***Title:***

| | | |
|---|---|---|
| Size: A4 | Date: 2026-01-15 | **Rev: Draft** |
| KiCad E.D.A. 9.0.7 | | Id: 7/8 |

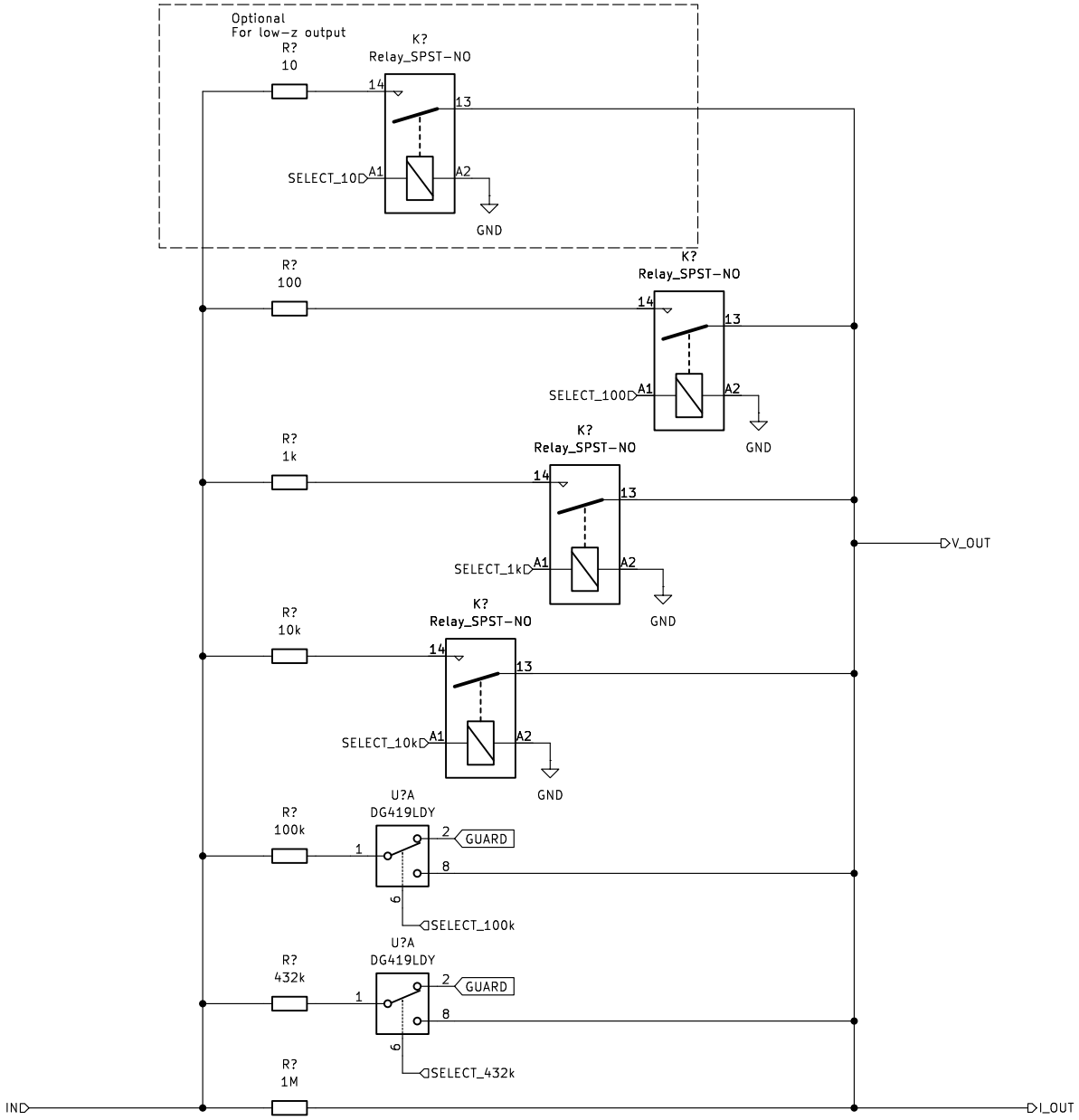


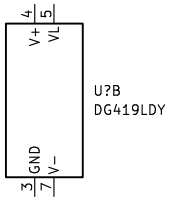


have selected suitable/cheap relay and analogue SPDT switches
we dont need the other switches in this config i think (!?)

**Harry and Yuki – EEE3 Instrumentation**

Sheet: /Auto-Balancing Bridge/Resistor Selector/
File: Resistors.kicad_sch

***Title:***

| Size: A4 | Date: | **Rev:** |
|---|---|---|
| KiCad E.D.A. 9.0.7 | | Id: 8/8 |

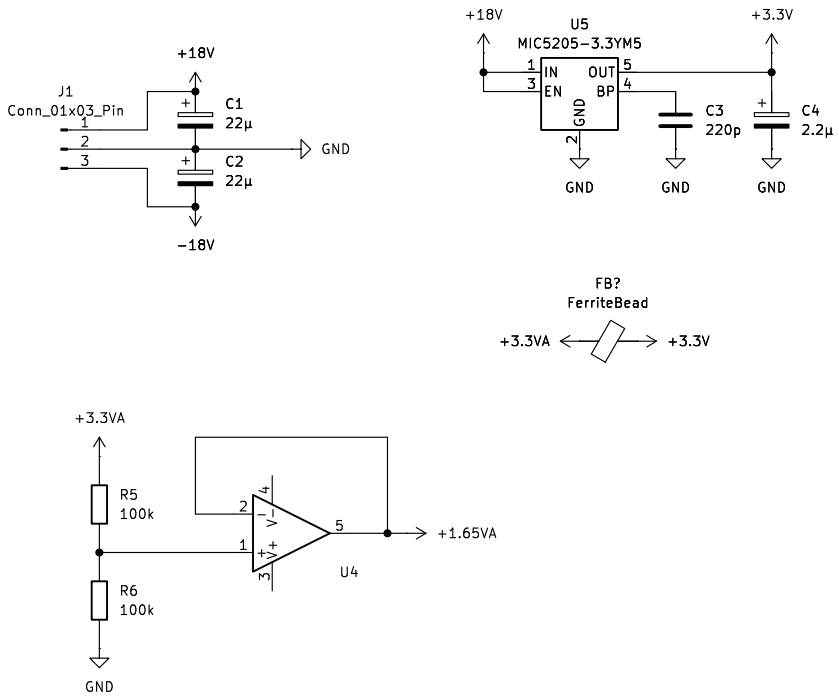


Work in Progress

**Harry and Yuki – EEE3 Instrumentation**

Sheet: /Power/

File: Power.kicad_sch

***Title:***

| | | |
|---|---|---|
| Size: A4 | Date: 2026−01−15 | **Rev: Draft** |
| KiCad E.D.A. 9.0.7 | | Id: 13/8 |